www.tempLED.de

tempLED

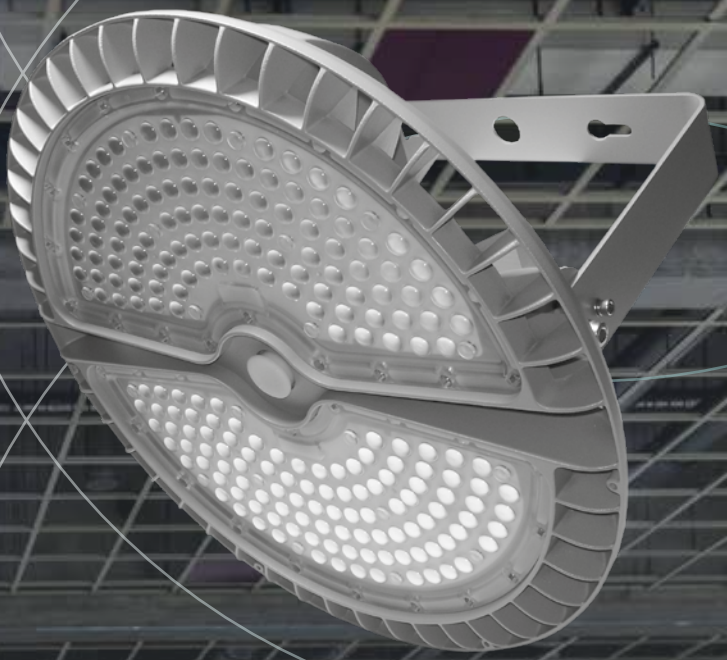

HALL PENDANT LIGHT

tempLED RayLite Pro

75 | 100 | 120 | 145 | 180 | 200 | 240 | 300

HALL LIGHTS

Our customer
Stadthalle Bremen

tempLED

initial system efficiency
up to 170 lm / w

up to 170 lm/w

modular overall structure
with exchangeable and replaceable main components

flexible mounting options

energy-efficient constant current
power supply with integrated DALI
dimming and optional
constant lumen output (CLO)

Power Factor Correction | CLO optional | DALI

pressure compensation membrane to prevent condensation

powerful, dust-permeable
heat sink made of
die-cast aluminum

solid luminaire housing with
poweder coating

IP 65

optional control and
safety systems:

CASAMBI

two durable and bright
LED light fields

4,000 K
5,000 K

R_a >80

impact and UV-resistant high-performance
optical system with four practical beam angles

IK08

UV

Light distribution curves tempLED RayLite Pro
75 | 100 | 120 | 145 | 180 | 200 | 240 | 300

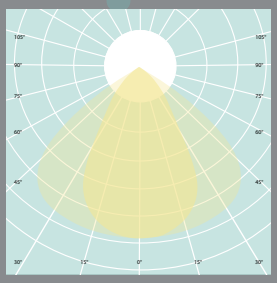

50/100 degrees asymmetrical
RayLite Pro 75 - 180

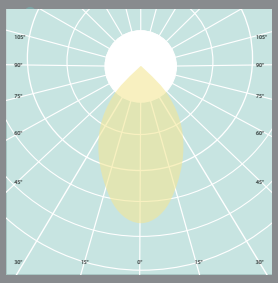

60 degrees symmetrical
RayLite Pro 75 - 300

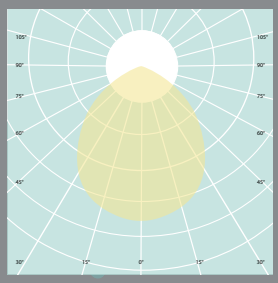

90 degrees symmetrical
RayLite Pro 75 - 300

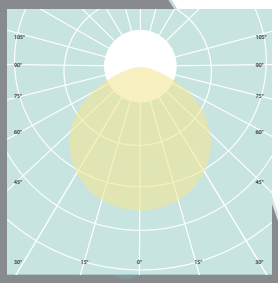

120 degrees symmetrical
RayLite Pro 75 - 180

tempLED RayLite Pro
75 | 100 | 120 | 145 | 180

200 | 240 | 300

Dimensions tempLED RayLite Pro
75 | 100 | 120 | 145 | 180

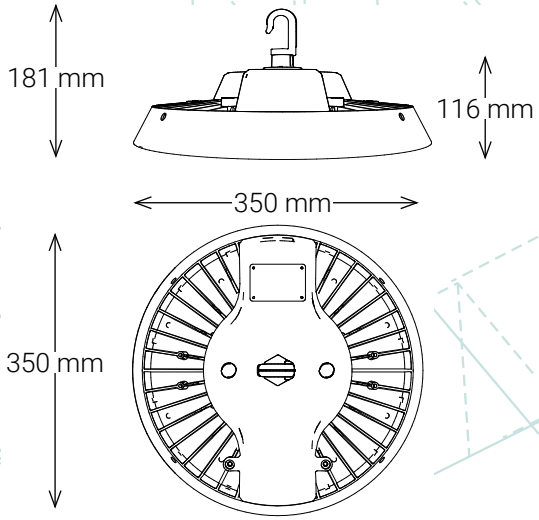

200 | 240 | 300

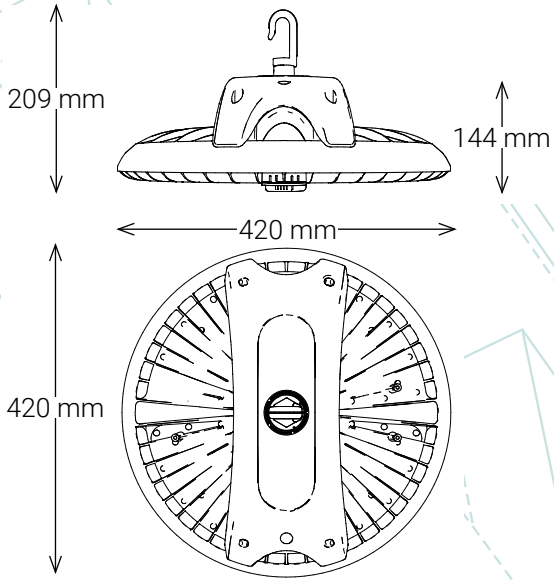

Mounting options tempLED RayLite Pro
75 | 100 | 120 | 145 | 180 | 200 | 240 | 300

pendant mounting

bracket mounting[1,2]

additional information:
luminaire height with ceiling bracket included is 300 mm.

rod mounting

suspension mounting

RayLite Pro 75 - 180 only

pole top mounting

[1] Adjustment range for surface mounting with standard ceiling bracket: -45 to +45 degrees.
[2] Adjustment range for surface mounting with optional wall bracket: 0 to 90 degrees.

General technical data

according to IEC, identical for all types of luminaires

5 years guarantee | 10 years spare part guarantee | in preparation | CE | RoHS | D

Lighting properties:

initial luminous flux:	approx. 12,750 to 51,000 lumens
luminous flux tolerance:	± 10 percent
initial system efficiency:	up to 170 lumens / watt
initial, most similar color temperature:	4,000 kelvins | 5,000 kelvins[1]
initial color rendering index (CRI):	Ra > 80
initial color consistency:	< 5 SDCM
available symmetrical beam angles:	60 | 90 | 120 degrees
available asymmetric beam angles:	50 x 100 degrees
photobiological safety:	IEC/TR 62778: 0
compact flicker degree (CFD):	1 percent

Electrotechnical properties:

power supply AC:	90 to 240 volts[2]
supply frequency:	50 / 60 hertz
power supply DC:	127 to 250 volts[3]
system performance:	75 to 300 watts
system performance tolerance:	± 10 percent
power factor:	> 0.95
overvoltage protection:	yes
overheating protection:	yes
temperature monitoring:	yes
total harmonic distortion (THD):	< 20 percent
temperature classification (ATEX):	T5
Tc - temperature:	+89 degrees Celsius

Energy characteristics:

Valid for all tempLED RayLite Pro:	This product contains a light source of energy efficiency class B.

Mounting options:

standard mounting options:	pendant mounting
optional mounting options:	ceiling bracket with adjustment range -45 to +45 degrees wall bracket with adjustment range 0 to 90 degrees suspension mounting (tempLED RayLite Pro 75 - 180 only) rod mounting pole top mounting

[1] additional color temperatures on request.
[2] power supply 249 to 528 VAC - 50/60 Hz on request.
[3] power supply 255 to 500 VDC on request.

Changes and errors excepted; similar pictures.

Control and safety properties:

dimming:	DALI
minimum dimming level:	10 percent
constant lumen output (CLO):	optional
control via the Casambi network:	optional
emergency light module:	optional
human centric lighting:	on request
daylight control system:	optional via the Casambi network

Housing properties:

ambient temperature:	–40 to +50 degrees Celsius
ingress protection:	IP 65
impact resistance level:	IK08
electrical protection class:	I
limited surface temperatur (D):	yes
pressure compensation membrane:	yes
housing and heat sink material(s):	die-cast aluminum
material of optical system:	impact- and UV-resistant polycarbonate
luminaire housing color:	white aluminium according to RAL 9006[1]
surface finish:	powder coating[1]
supply cable type:	H05RN-F 5G1
supply cable length:	200 centimeters
supply cable inlet:	cable gland
supply cable connection type:	open cable end
number of poles:	3 grid / 2 DALI

Additional information:

certificates:	ENEC in preparation
conformities:	CE and RoHS
lifespan (L70B10C1):	approx. 100,000 hours
lifespan (L90B10C1):	approx. 50,000 hours
guarantee:	5 years[2]
spare part guarantee:	10 years
delievery includes:	luminaire and mounting hook for pendant mounting

[1] optional luminaire housing colors and finishes: Paintings according to RAL colour chart, powder coatings according to RAL colour chart or synthetic resin coating.
[2] according to the warranty conditions of tempLED GmbH, excluding accessories.

Logistic information:

luminaire:	RayLite Pro 75 | 100 | 120 | 145	RayLite Pro 180	RayLite Pro 200 | 240 | 300
number of luminaires per package:	1	1	1
number of luminaires per pallet:	66	66	40
net weight of the luminaire:	4,000 g	4,300 g	7,000 g
gross weight per package:	4,500 g	4,800 g	7,800 g
package dimensions L x W x H:	390 x 390 x 170 mm	390 x 390 x 170 mm	500 x 500 x 190 mm

tempLED 75	RayLite Pro 75 - 60	RayLite Pro 75 - 90	RayLite Pro 75 - 120	RayLite Pro 75 - 50/100
article number:	347064	347094	347024	347054
GTIN / EAN:	4260669190894	4260669190900	4260669190917	4260669190924
initial luminous flux:	approx. 12,750 lm	approx. 12,750 lm	approx. 12,750 lm	approx. 12,750 lm
initial system efficiency:	approx. 170 lm/w	approx. 170 lm/w	approx. 170 lm/w	approx. 170 lm/w
initial, most similar color temperature:	4,000 K	4,000 K	4,000 K	4,000 K
light distribution:	symmetrical	symmetrical	symmetrical	asymmetrical
beam angle:	60 degrees	90 degrees	120 degrees	50 x 100 degrees
dimming / control:	DALI	DALI	DALI	DALI
system performance:	75 W	75 W	75 W	75 W
power consumption:	0.31 A	0.31 A	0.31 A	0.31 A
maximum inrush current:	50 A	50 A	50 A	50 A
dimensions (Ø x H):	350 x 181 mm	350 x 181 mm	350 x 181 mm	350 x 181 mm

tempLED 75	RayLite Pro 75 - 60	RayLite Pro 75 - 90	RayLite Pro 75 - 120	RayLite Pro 75 - 50/100
article number:	347065	347095	347025	347055
GTIN / EAN:	4260669190245	4260669190252	4260669190269	4260669190276
initial luminous flux:	approx. 12,750 lm	approx. 12,750 lm	approx. 12,750 lm	approx. 12,750 lm
initial system efficiency:	approx. 170 lm/w	approx. 170 lm/w	approx. 170 lm/w	approx. 170 lm/w
initial, most similar color temperature:	5,000 K	5,000 K	5,000 K	5,000 K
light distribution:	symmetrical	symmetrical	symmetrical	asymmetrical
beam angle:	60 degrees	90 degrees	120 degrees	50 x 100 degrees
dimming / control:	DALI	DALI	DALI	DALI
system performance:	75 W	75 W	75 W	75 W
power consumption:	0.31 A	0.31 A	0.31 A	0.31 A
maximum inrush current:	50 A	50 A	50 A	50 A
dimensions (Ø x H):	350 x 181 mm	350 x 181 mm	350 x 181 mm	350 x 181 mm

tempLED 100	RayLite Pro 100 - 60	RayLite Pro 100 - 90	RayLite Pro 100 - 120	RayLite Pro 100 - 50/100
article number:	347164	347194	347124	347154
GTIN / EAN:	4260669190931	4260669190948	4260669190955	4260669190962
initial luminous flux:	approx. 17,000 lm	approx. 17,000 lm	approx. 17,000 lm	approx. 17,000 lm
initial system efficiency:	approx. 170 lm/w	approx. 170 lm/w	approx. 170 lm/w	approx. 170 lm/w
initial, most similar color temperature:	4,000 K	4,000 K	4,000 K	4,000 K
light distribution:	symmetrical	symmetrical	symmetrical	asymmetrical
beam angle:	60 degrees	90 degrees	120 degrees	50 x 100 degrees
dimming / control:	DALI	DALI	DALI	DALI
system performance:	100 W	100 W	100 W	100 W
power consumption:	0.42 A	0.42 A	0.42 A	0.42 A
maximum inrush current:	60 A	60 A	60 A	60 A
dimensions (Ø x H):	350 x 181 mm	350 x 181 mm	350 x 181 mm	350 x 181 mm

tempLED 100	RayLite Pro 100 - 60	RayLite Pro 100 - 90	RayLite Pro 100 - 120	RayLite Pro 100 - 50/100
article number:	347165	347195	347125	347155
GTIN / EAN:	4260669190283	4260669190290	4260669190306	4260669190373
initial luminous flux:	approx. 17,000 lm	approx. 17,000 lm	approx. 17,000 lm	approx. 17,000 lm
initial system efficiency:	approx. 170 lm/w	approx. 170 lm/w	approx. 170 lm/w	approx. 170 lm/w
initial, most similar color temperature:	5,000 K	5,000 K	5,000 K	5,000 K
light distribution:	symmetrical	symmetrical	symmetrical	asymmetrical
beam angle:	60 degrees	90 degrees	120 degrees	50 x 100 degrees
dimming / control:	DALI	DALI	DALI	DALI
system performance:	100 W	100 W	100 W	100 W
power consumption:	0.42 A	0.42 A	0.42 A	0.42 A
maximum inrush current:	60 A	60 A	60 A	60 A
dimensions (Ø x H):	350 x 181 mm	350 x 181 mm	350 x 181 mm	350 x 181 mm

tempLED 120	RayLite Pro 120 - 60	RayLite Pro 120 - 90	RayLite Pro 120 - 120	RayLite Pro 120 - 50/100
article number:	347264	347294	347224	347254
GTIN / EAN:	4260669190979	4260669190986	4260669190993	4260669191006
initial luminous flux:	approx. 20,400 lm	approx. 20,400 lm	approx. 20,400 lm	approx. 20,400 lm
initial system efficiency:	approx. 170 lm/w	approx. 170 lm/w	approx. 170 lm/w	approx. 170 lm/w
initial, most similar color temperature:	4,000 K	4,000 K	4,000 K	4,000 K
light distribution:	symmetrical	symmetrical	symmetrical	asymmetrical
beam angle:	60 degrees	90 degrees	120 degrees	50 x 100 degrees
dimming / control:	DALI	DALI	DALI	DALI
system performance:	120 W	120 W	120 W	120 W
power consumption:	0.50 A	0.50 A	0.50 A	0.50 A
maximum inrush current:	60 A	60 A	60 A	60 A
dimensions (Ø x H):	350 x 181 mm	350 x 181 mm	350 x 181 mm	350 x 181 mm

tempLED 120	RayLite Pro 120 - 60	RayLite Pro 120 - 90	RayLite Pro 120 - 120	RayLite Pro 120 - 50/100
article number:	347265	347295	347225	347255
GTIN / EAN:	4260669190320	4260669190337	4260669190344	4260669190351
initial luminous flux:	approx. 20,400 lm	approx. 20,400 lm	approx. 20,400 lm	approx. 20,400 lm
initial system efficiency:	approx. 170 lm/w	approx. 170 lm/w	approx. 170 lm/w	approx. 170 lm/w
initial, most similar color temperature:	5,000 K	5,000 K	5,000 K	5,000 K
light distribution:	symmetrical	symmetrical	symmetrical	asymmetrical
beam angle:	60 degrees	90 degrees	120 degrees	50 x 100 degrees
dimming / control:	DALI	DALI	DALI	DALI
system performance:	120 W	120 W	120 W	120 W
power consumption:	0.50 A	0.50 A	0.50 A	0.50 A
maximum inrush current:	60 A	60 A	60 A	60 A
dimensions (Ø x H):	350 x 181 mm	350 x 181 mm	350 x 181 mm	350 x 181 mm

tempLED 145	RayLite Pro 145 - 60	RayLite Pro 145 - 90	RayLite Pro 145 - 120	RayLite Pro 145 - 50/100
article number:	347364	347394	347324	347354
GTIN / EAN:	4260669191013	4260669191020	4260669191037	4260669191044
initial luminous flux:	approx. 24,650 lm	approx. 24,650 lm	approx. 24,650 lm	approx. 24,650 lm
initial system efficiency:	approx. 170 lm/w	approx. 170 lm/w	approx. 170 lm/w	approx. 170 lm/w
initial, most similar color temperature:	4,000 K	4,000 K	4,000 K	4,000 K
light distribution:	symmetrical	symmetrical	symmetrical	asymmetrical
beam angle:	60 degrees	90 degrees	120 degrees	50 x 100 degrees
dimming / control:	DALI	DALI	DALI	DALI
system performance:	145 W	145 W	145 W	145 W
power consumption:	0.61 A	0.61 A	0.61 A	0.61 A
maximum inrush current:	60 A	60 A	60 A	60 A
dimensions (Ø x H):	350 x 181 mm	350 x 181 mm	350 x 181 mm	350 x 181 mm

tempLED 145	RayLite Pro 145 - 60	RayLite Pro 145 - 90	RayLite Pro 145 - 120	RayLite Pro 145 - 50/100
article number:	347365	347395	347325	347355
GTIN / EAN:	4260669190368	4260669190375	4260669190382	4260669190399
initial luminous flux:	approx. 24,650 lm	approx. 24,650 lm	approx. 24,650 lm	approx. 24,650 lm
initial system efficiency:	approx. 170 lm/w	approx. 170 lm/w	approx. 170 lm/w	approx. 170 lm/w
initial, most similar color temperature:	5,000 K	5,000 K	5,000 K	5,000 K
light distribution:	symmetrical	symmetrical	symmetrical	asymmetrical
beam angle:	60 degrees	90 degrees	120 degrees	50 x 100 degrees
dimming / control:	DALI	DALI	DALI	DALI
system performance:	145 W	145 W	145 W	145 W
power consumption:	0.61 A	0.61 A	0.61 A	0.61 A
maximum inrush current:	60 A	60 A	60 A	60 A
dimensions (Ø x H):	350 x 181 mm	350 x 181 mm	350 x 181 mm	350 x 181 mm

tempLED 180	RayLite Pro 180 - 60	RayLite Pro 180 - 90	RayLite Pro 180 - 120	RayLite Pro 180 - 50/100
article number:	347464	347494	347424	347454
GTIN / EAN:	4260669191051	4260669191068	4260669191075	4260669191082
initial luminous flux:	approx. 30,600 lm	approx. 30,600 lm	approx. 30,600 lm	approx. 30,600 lm
initial system efficiency:	approx. 170 lm/w	approx. 170 lm/w	approx. 170 lm/w	approx. 170 lm/w
initial, most similar color temperature:	4,000 K	4,000 K	4,000 K	4,000 K
light distribution:	symmetrical	symmetrical	symmetrical	asymmetrical
beam angle:	60 degrees	90 degrees	120 degrees	50 x 100 degrees
dimming / control:	DALI	DALI	DALI	DALI
system performance:	180 W	180 W	180 W	180 W
power consumption:	0.75 A	0.75 A	0.75 A	0.75 A
maximum inrush current:	60 A	60 A	60 A	60 A
dimensions (Ø x H):	350 x 181 mm	350 x 181 mm	350 x 181 mm	350 x 181 mm

tempLED 180	RayLite Pro 180 - 60	RayLite Pro 180 - 90	RayLite Pro 180 - 120	RayLite Pro 180 - 50/100
article number:	347465	347495	347425	347455
GTIN / EAN:	4260669190405	4260669190412	4260669190429	4260669190436
initial luminous flux:	approx. 30,600 lm	approx. 30,600 lm	approx. 30,600 lm	approx. 30,600 lm
initial system efficiency:	approx. 170 lm/w	approx. 170 lm/w	approx. 170 lm/w	approx. 170 lm/w
initial, most similar color temperature:	5,000 K	5,000 K	5,000 K	5,000 K
light distribution:	symmetrical	symmetrical	symmetrical	asymmetrical
beam angle:	60 degrees	90 degrees	120 degrees	50 x 100 degrees
dimming / control:	DALI	DALI	DALI	DALI
system performance:	180 W	180 W	180 W	180 W
power consumption:	0.75 A	0.75 A	0.75 A	0.75 A
maximum inrush current:	60 A	60 A	60 A	60 A
dimensions (Ø x H):	350 x 181 mm	350 x 181 mm	350 x 181 mm	350 x 181 mm

tempLED 200	RayLite Pro 200 - 60	RayLite Pro 200 - 90	RayLite Pro 200 - 60	RayLite Pro 200 - 90
article number:	347564	347594	347565	347595
GTIN / EAN:	4260669191099	4260669191105	4260669190443	4260669190450
initial luminous flux:	approx. 34,000 lm	approx. 34,000 lm	approx. 34,000 lm	approx. 34,000 lm
initial system efficiency:	approx. 170 lm/w	approx. 170 lm/w	approx. 170 lm/w	approx. 170 lm/w
initial, most similar color temperature:	4,000 K	4,000 K	5,000 K	5,000 K
light distribution:	symmetrical	symmetrical	symmetrical	symmetrical
beam angle:	60 degrees	90 degrees	60 degrees	90 degrees
dimming / control:	DALI	DALI	DALI	DALI
system performance:	200 W	200 W	200 W	200 W
power consumption:	0.83 A	0.83 A	0.83 A	0.83 A
maximum inrush current:	75 A	75 A	75 A	75 A
dimensions (Ø x H):	420 x 209 mm	420 x 209 mm	420 x 209 mm	420 x 209 mm

tempLED 240	RayLite Pro 240 - 60	RayLite Pro 240 - 90	RayLite Pro 240 - 60	RayLite Pro 240 - 90
article number:	347664	347694	347665	347695
GTIN / EAN:	4260669191112	4260669191129	4260669190467	4260669190474
initial luminous flux:	approx. 40,800 lm	approx. 40,800 lm	approx. 40,800 lm	approx. 40,800 lm
initial system efficiency:	approx. 170 lm/w	approx. 170 lm/w	approx. 170 lm/w	approx. 170 lm/w
initial, most similar color temperature:	4,000 K	4,000 K	5,000 K	5,000 K
light distribution:	symmetrical	symmetrical	symmetrical	symmetrical
beam angle:	60 degrees	90 degrees	60 degrees	90 degrees
dimming / control:	DALI	DALI	DALI	DALI
system performance:	240 W	240 W	240 W	240 W
power consumption:	1.00 A	1.00 A	1.00 A	1.00 A
maximum inrush current:	75 A	75 A	75 A	75 A
dimensions (Ø x H):	420 x 209 mm	420 x 209 mm	420 x 209 mm	420 x 209 mm

tempLED 300	RayLite Pro 300 - 60	RayLite Pro 300 - 90	RayLite Pro 300 - 60	RayLite Pro 300 - 90
article number:	347764	347794	347765	347795
GTIN / EAN:	4260669191136	4260669191143	4260669190481	4260669190498
initial luminous flux:	approx. 51,000 lm	approx. 51,000 lm	approx. 51,000 lm	approx. 51,000 lm
initial system efficiency:	approx. 170 lm/w	approx. 170 lm/w	approx. 170 lm/w	approx. 170 lm/w
initial, most similar color temperature:	4,000 K	4,000 K	5,000 K	5,000 K
light distribution:	symmetrical	symmetrical	symmetrical	symmetrical
beam angle:	60 degrees	90 degrees	60 degrees	90 degrees
dimming / control:	DALI	DALI	DALI	DALI
system performance:	300 W	300 W	300 W	300 W
power consumption:	1.25 A	1.25 A	1.25 A	1.25 A
maximum inrush current:	70 A	70 A	70 A	70 A
dimensions (Ø x H):	420 x 209 mm	420 x 209 mm	420 x 209 mm	420 x 209 mm

tempLED	Accessory catalogue RayLite Pro	art.-no.	GTIN / EAN
	ceiling bracket suitable only for tempLED RayLite Pro 75 / 100 / 120 / 145 / 180 material: steel, finish: powder coating in white aluminum according to RAL 9006, adjustment range of the luminaire: -45 to +45 degrees	932151	4260491846150
	ceiling bracket suitable only for tempLED RayLite Pro 75 / 100 / 120 / 145 / 180 material: stainless steel, finish: natural, adjustment range of the luminaire: -45 to +45 degrees	932153	4260491846174
	ceiling bracket suitable only for tempLED RayLite Pro 200 / 240 / 300 material: steel, finish: powder coating in white aluminum according to RAL 9006, adjustment range of the luminaire: -45 to +45 degrees	932152	4260491846167
	ceiling bracket suitable only for tempLED RayLite Pro 200 / 240 / 300 material: stainless steel, finish: natural, adjustment range of the luminaire: -45 to +45 degrees	932154	4260491846181
	wall bracket suitable only for tempLED RayLite Pro 75 / 100 / 120 / 145 / 180 material: stainless steel, finish: natural, adjustment range of the luminaire: 0 to 90 degrees	934041	4260669194335
	wall bracket suitable only for tempLED RayLite Pro 200 / 240 / 300 material: stainless steel, finish: natural, adjustment range of the luminaire: 0 to 90 degrees	934042	4260669194342
	rope suspension suitable only for tempLED RayLite Pro 75 / 100 / 120 / 145 / 180 4-point-system, material: steel, finish: natural, maximum suspension height: 700 mm	932161	4260491846259
	mast holder for pole top mast holder for mounting the tempLED RayLite Pro on pole tops, material: steel, finish: powder coating in white aluminum according to RAL 9006, plait measure: 60 mm	932165	4260491845297

tempLED	Accessory catalogue RayLite Pro	art.-no.	GTIN / EAN
	mounting rod for rod mounting of the tempLED RayLite Pro or for indirect illuminated installations, material: steel, finish: powder coating in white aluminum according to RAL 9006, length: 100 cm	932162	4260491846266
	mounting rod for rod mounting of the tempLED RayLite Pro or for indirect illuminated installations, material: steel, finish: powder coating in white aluminum according to RAL 9006, length: 150 cm	932163	4260491846273
	mounting rod for rod mounting of the tempLED RayLite Pro or for indirect illuminated installations, material: steel, finish: powder coating in white aluminum according to RAL 9006, length: 200 cm	932164	4260491846280
	reflector system suitable only for tempLED RayLite Pro 75 / 100 / 120 / 145 / 180 material: impact-resistant and shatter-proof polycarbonate, finish: light directing prism	932155	4260491846198
	reflector system suitable only for tempLED RayLite Pro 75 / 100 / 120 / 145 / 180 material: aluminum, finish: natural	932168	4260491846327
	reflector system suitable only for tempLED RayLite Pro 200 / 240 / 300 material: aluminum, finish: natural	932169	4260491846334
	safety plug 3-pin safety plug with ingress protection IP 44, installed on the supply cable of the luminaire	945400	4260491842251
	supply cable extension ready-to-use 5-pin supply cable extension up to 10 meters	933499	4260491849687
	Wieland connector RST 20i5 5-pin socket part; color coding: turquoise blue, 250 V, 20 A, with protective conductor, for cable diameter 6 - 10 mm	945430	4260491842329
	Wieland connector RST 20i5 5-pin connector part; color coding: turquoise blue, 250 V, 20 A, with protective conductor, installed on the supply cable of the luminaire	945431	4260491842336
CASAMBI	**Casambi control unit** suitable only for tempLED RayLite Pro 75 / 100 / 120 / 145 / 180 for integrating and controlling the luminaire via the Casambi network, mounted on the luminaire ready for use	934179	4260669198166
CASAMBI	**Casambi control unit** suitable only for tempLED RayLite Pro 200 / 240 / 300 for integrating and controlling the luminaire via the Casambi network, mounted on the luminaire ready for use	934180	4260669198173
	emergency light module suitable only for tempLED RayLite Pro 75 / 100 / 120 / 145 / 180 with automatic detection of failure and return of supply voltage, display of functional status, battery type: LiFePO4, running time either approx. 1 hour with an output power of approx. 6 watts or approx. 3 hours with an output power of approx. 3 watts, recharging time: approx. 24 hours, mounted on the luminaire ready for use	932277	4260745230216
	emergency light module suitable only for tempLED RayLite Pro 200 / 240 / 300 with automatic detection of failure and return of supply voltage, display of functional status, battery type: LiFePO4, running time either approx. 1 hour with an output power of approx. 6 watts or approx. 3 hours with an output power of approx. 3 watts, recharging time: approx. 24 hours, mounted on the luminaire ready for use	932278	4260745230223