www.templed.de

tempLED

ROUTE AND ORIENTATION LIGHTING

tempLED RayWay HT

30 | 50

MULTI-PURPOSE LIGHTS

HIGH TEMPERATURES

modular overall structure with exchangeable and replaceable main components

pressure compensation membrane to prevent condensation

energy-efficient constant current power supply with integrated DALI dimming and optional constant lumen output (CLO)

Power Factor Correction

DALI

CLO optional

solid luminaire housing optimized for high-temperature surroundings up to +70° Celsius

+70° C

-40°C

IP 67

UV

high-performance heat sink with chimney effect made of die-cast aluminum

durable and bright LED light field

4,000 K

5,000 K

R_a >80

inside sandblasted glass bulb for a wide and even light distribution over 180 degrees

180°

impact-resistant cover bulb made of 7 mm glass

IK08

Applications:

cold-store areas

paper industry

wood processing

industrial plants

high-temperature surroundings

Changes and errors excepted; similar pictures.

initial system efficiency up to 130 lm / w

for high-temperature surroundings

integrated DALI dimming

5 years guarantee

»Pointing the way and providing orientation«

Light distribution curve tempLED RayWay HT
30 | 50

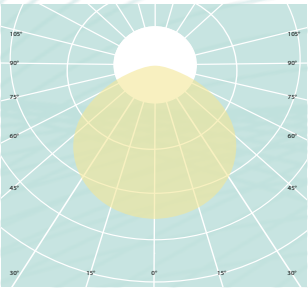

180 degrees symmetrical

General technical data (according to IEC, identical for all types of luminaires)

Lighting properties

initial luminous flux:	approx. 3,900 to 6,500 lumens	luminous flux tolerance:	± 10 percent
initial system efficiency:	up to 130 lumens / watt	photobiological safety:	IEC/TR 62778: 1
initial, most similar color temperature:	4,000 and 5,000 kelvins[1]	initial color consistency:	< 5 SDCM
initial color rendering index (CRI):	R_a > 80	compact flicker degree (CFD):	on request

[1] additional color temperatures on request

Electrotechnical properties

power supply (AC):	198 to 240 volts	supply frequency:	50 / 60 hertz
power supply (DC):	176 to 250 volts	power factor:	> 0.97
system performance:	30 to 50 watts	system performance tolerance:	± 10 percent
overvoltage protection:	yes	overheating protection:	yes
temperature monitoring:	yes	total harmonic distortion:	< 8 percent
temperature classification (ATEX):	T5	T_c temperature:	+85 degrees Celsius

Control and dimming properties

dimming:	DALI	minimum dimming level:	5 percent
control:	Casambi and Nedap optional[2]	constant lumen output (CLO):	optional
human centric lighting (HCL):	on request	emergency light module:	optional[2]

[2] can only be used at ambient temperatures of max. +50 degrees Celsius

Housing properties

ambient temperature:	−40 to +70 degrees Celsius	ingress protection:	IP 67
impact resistance level:	IK08	electrical protection class:	I
housing material:	powder-coated steel and aluminum	pressure compensation membrane:	yes
cover bulb material:	7 mm glass	limited surface temperature (D):	yes
housing color:	white aluminum (RAL9006)	optional housing color:	painting acc. to RAL color chart
supply connection type:	2x cable gland	number of poles:	3 grid / 2 DALI

Additional informationen

certificates:	ENEC in preparation	conformities:	CE and RoHS
lifespan (L70B10C1):	approx. 100,000 hours	lifespan (L90B10C1):	approx. 50,000 hours
guarantee:	5 years[3]	spare parts guarantee:	10 years
delievery includes:	luminaire		

[3] according to the warranty conditions of tempLED GmbH, excluding accessories

Logistic informationen

	RayWay 30 | 50 HT
number of luminaires per package:	1
number of luminaires per pallet:	44
net weight of luminaire:	7,000 g
gross weight per package:	7,900 g
package dimensions L x W x H:	241 x 181 x 392 mm

Energy characteristics

Valid for all tempLED RayWay HT:	This product contains a light source of energy efficiency class E.

tempLED RayWay HT
30 | 50

Dimensions tempLED RayWay HT
30 | 50

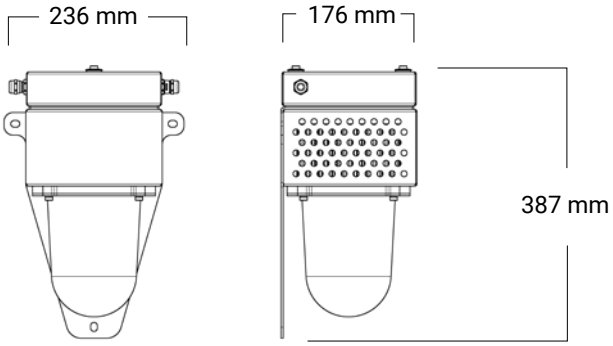

Mounting options tempLED RayWay HT
30 | 50

wall mounting

ceiling mounting

with optional
ceiling mounting bracket

tempLED 30

	RayWay 30 - 180 HT	RayWay 30 - 180 HT
article number:	874384	874385
GTIN / EAN:	4260669199873	4260669199880
initial luminious flux:	approx. 3,900 lm	approx. 3,900 lm
initial system efficiency:	approx. 130 lm / W	approx. 130 lm / W
initial, most similar color temperature:	4,000 K	5,000 K
light distribution:	symmetrical	symmetrical
beam angle:	180°	180°
dimming / control:	DALI	DALI
system performance:	30 W	30 W
power consumption:	0.13 A	0.13 A
maximum inrush current:	32 A	32 A
dimensions L x H x W:	236 x 387 x 173 mm	236 x 387 x 173 mm
stock item:	no	no

tempLED 50

	RayWay 50 - 180 HT	RayWay 50 - 180 HT
article number:	874584	874585
GTIN / EAN:	4260669199132	4260669199149
initial luminious flux:	approx. 6,500 lm	approx. 6,500 lm
initial system efficiency:	approx. 130 lm / W	approx. 130 lm / W
initial, most similar color temperature:	4,000 K	5,000 K
light distribution:	symmetrical	symmetrical
beam angle:	180°	180°
dimming / control:	DALI	DALI
system performance:	50 W	50 W
power consumption:	0.22 A	0.22 A
maximum inrush current:	32 A	32 A
dimensions L x H x W:	236 x 387 x 173 mm	236 x 387 x 173 mm
stock item:	no	no

ACCESSORIES

		EAN / GTIN	art. no.
	ceiling bracket mounting bracket for ceiling mounting finish: powder-coated steel	4260669199897	080016
CASAMBI	**Casambi control unit** for integrating and controlling the luminaire via the Casambi network, can only be used at ambient temperatures of max. +50 degrees Celsius, mounted on the luminaire ready for use	4260669199903	934228
nedap	**Nedap control unit** for integrating and controlling the luminaire via the Nedap network, can only be used at ambient temperatures of max. +50 degrees Celsius, mounted on the luminaire ready for use	4260669199910	934229
	emergency light module for wall mounting with automatic detection of failure and return of supply voltage, display of functional status, battery type: LiFePO4, running time either approx. 1 hour with an output power of approx. 6 watts or approx. 3 hours with an output power of approx. 3 watts, recharging time: approx. 24 hours, can only be used at ambient temperatures of max. +50 degrees Celsius wall mounting bracket included	4260745230292	932285

data sheets

lighting design files

installation instructions

simply download at
www.templed.de/downloads/